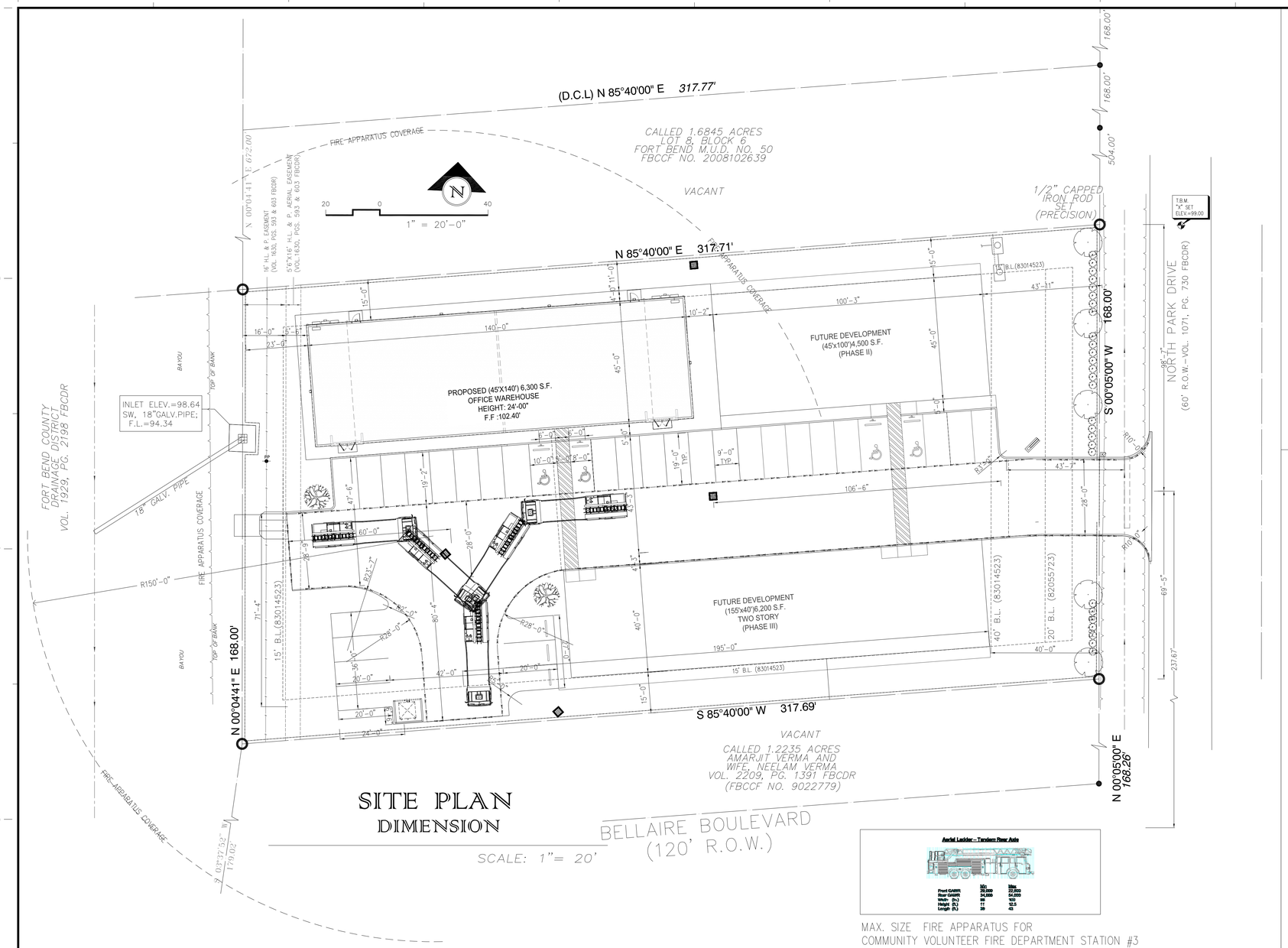

SITE PLAN DIMENSION

MAX. SIZE FIRE APPARATUS FOR COMMUNITY VOLUNTEER FIRE DEPARTMENT STATION #3

APPROVED: _____
Development Coordinator

DATE: _____

FIRE APPARATUS ACCESS NOTE

- FIRE LANE MUST BE INSTALLED BEFORE ANY VERTICAL CONSTRUCTION BEGINS
- KNOX BOX WITH THE FIRE DEPARTMENT'S KEYWAY, MUST BE MOUNTED ON THE EXTERIOR NEAR THE MAIN ENTRANCE, NO HIGHER THAN 6' FROM THE GROUND.KNOX BOXES MUST BE INSTALLED WITH THE PROPER KEYS INSIDE PRIOR TO ISSUANCE OF CERTIFICATE OF OCCUPANCY.

FORT BEND COUNTY FIRE CODES NOTES

THE FIRE APPARATUS ACCESS ROAD SHALL EXTEND TO WITHIN 150 FEET (45, 720MM) OF ALL PORTIONS OF THE FACILITY AND ALL PORTIONS OF THE EXTERIOR WALLS OF THE FIRST STORY OF THE BUILDING AS MEASURED BY AN APPROVED ROUTE AROUND THE EXTERIOR OF THE BUILDING OR FACILITY.
THE ONE-HUNDRED FIFTY (150)FEEL SHALL BE MEASURED ALONG A TEN (10) FOOT WIDE UNOBSTRUCTED LEVEL PATHWAY NOT EXCEEDING A SLOPE OF 5:1,AROUND THE EXTERNAL WALLS OF THE STRUCTURE.
AN UNOBSTRUCTED FIVE- (5) FOOT WIDE LEVEL PATHWAY SHALL BE PROVIDED THROUGH ALL BARRIERS.
FIRE LANE EASEMENTS SHALL BE PROVIDED TO SERVE ALL BUILDINGS THROUGH PARKING AREAS, TO SERVICE ENTRANCES OF BUILDINGS. LOADING AREAS AND TRASH COLLECTION AREAS AND OTHER AREAS DEEMED NECESSARY TO BE AVAILABLE TO FIRE AND EMERGENCY VEHICLES.

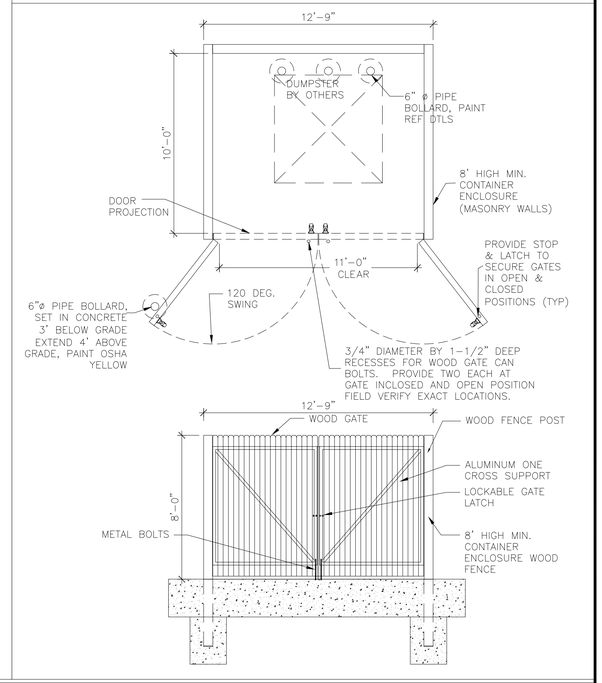

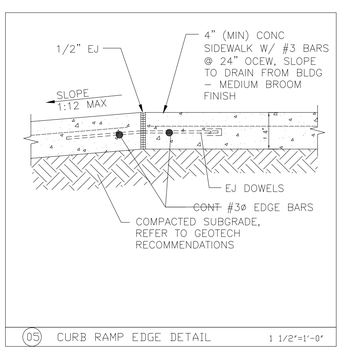

05 CURB RAMP EDGE DETAIL 1 1/2"=1'-0"

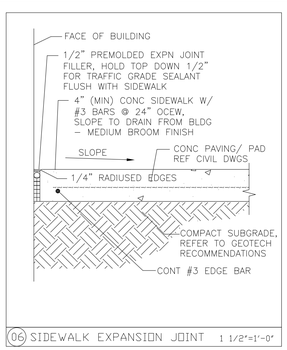

06 SIDEWALK EXPANSION JOINT 1 1/2"=1'-0"

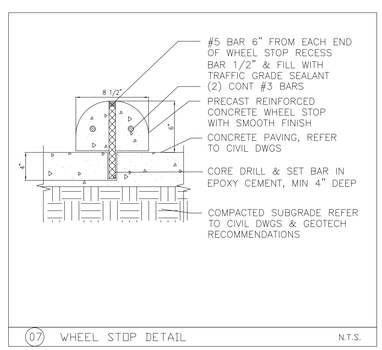

07 WHEEL STOP DETAIL N.T.S.

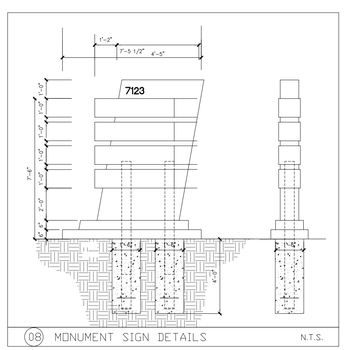

08 MONUMENT SIGN DETAILS N.T.S.

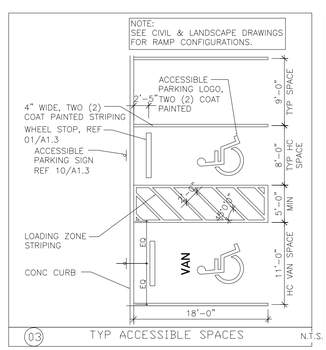

03 TYP ACCESSIBLE SPACES N.T.S.

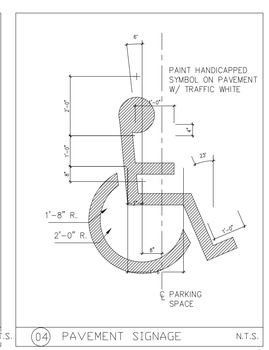

04 PAVEMENT SIGNAGE N.T.S.

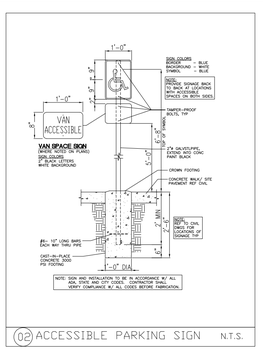

02 ACCESSIBLE PARKING SIGN N.T.S.

HoutTex Engineering, LLC
9111 Katy Freeway, Suite 226
Houston, Texas 77024
E-mail: Info@HoutTexEngineering.com
Phone: (713) 973-1400 Fax: (281) 888-9001
Civil Engineering and consultant
FIRM NAME: HOUTEX ENGINEERING
FIRM REGISTRATION NUMBER: F-12522

STATE OF TEXAS
ZIAEDDIN MOHAMMADI
67639
REGISTERED PROFESSIONAL ENGINEER
08/07/2018

#	DATE	REVISION
1	8/7/2018	FOR F. B. C. FIRE MARSHAL COMMENTS
2		
3		
4		

PROP. OFFICE WAREHOUSE
NORTH PARK
WAREHOUSE(PHASE 1)
7123 NORTH PARK DRIVE
HOUSTON, TX 77407

SITE PLAN DIMENSIONS

SCALE: 1"=20'

CONTROL:
DWG BY: SLP 29-Mar-18
RVS'D BY: 7-Aug-18
CK'D BY: SLP APRV'D BY: ZM

PROJECT NO. HT1713901

SP.002
SHEET 3 OF 6

INFORMATION, DATA AND DRAWINGS EMBODIED IN THIS DRAWINGS ARE STRICTLY CONFIDENTIAL AND ARE SUPPLIED ON THE UNDERSTANDING THAT THEY WILL BE HELD CONFIDENTIALLY AND NOT DISCLOSED TO THIRD PARTIES AND CANNOT BE REPRODUCED OR DIVULGED, IN WHOLE OR IN PART, WITHOUT WRITTEN AUTHORIZATION FROM HOUTEX ENGINEERING.